S SERIES™

CLARK THE FORKLIFT
CLARK
100 Years
EST. 1917

S25C

CUSHION

20/25/30/32

Max Load Capacity
4000 / 5000 / 6000 / 6500 lbs.
(2000 / 2500 / 3000 / 3200 kg)

CLARK®

S SERIES™

SMART · STRONG · SAFE

Building on over 100 years of lift truck innovations, design and industry firsts.
The evolution continues… the CLARK S-Series, the next generation of lift trucks.

SMART

Our design standards have historically led the industry in innovation and firsts; the S-Series represents the next phase of lift truck design.

- Interactive Dash
- Built-In Reporting of Truck and Operator Performance via Optional Telemetry
- Engine/Powertrain Protection
- Integrated Systematic Service Tools
- On-Board Reporting of Operator Controlled Functions

STRONG

CLARK trucks are "Built to Last"; from our industrial designs to our legacy Dealers our combined strengths ensure a strong performance to your bottom line and overall lower cost of ownership.

- Force-Cooled Wet Disc Brakes
- Fully Welded Heavy Gauge Frame
- Nested I-Beam Upright
- 6-Roller Carriage
- External Side-Thrust Rollers
- Proven Steer Axles and Cooling Systems

SAFE

CLARK makes your safety our priority. Safety is and has been a cornerstone of CLARK design standards for over 100 years. Our standards became the industry standards. The S-Series innovates again with standard features including:

- Automatically Applied Parking Brake
- Speed Limit Control
- Increased Visibility
- Optional Rear View Camera
- High-Visibility Orange Seat Belt
- Designed with Optimal Center-of-Gravity to Enhance Truck Stability

SMART · STRONG · SAFE

S SERIES™

Operator Comfort and Productivity

- Minimal Vibration and Noise to the Operator via a Balanced Engine and Isolated Transmission
- Adjustable Full-Suspension Seat
- Hood-Mounted Levers with Low Input Force
- Large Floor Board Improves Leg Room and Boot Clearance
- Small Diameter Steering Wheel with Low Steering Effort
- Reduced Brake and Inching Pedal Effort
- Steering Column Adjustable Tilt Range of 30°
- Optimized Step Height

Low Cost of Ownership

- 500 Hour Oil Service Interval on Ford Engines
- 2,000 Hour Oil Service Interval on Transmission (for General Warehouse Applications)
- Optimized Hydraulic Operating Pressure Reduces Fuel Consumption
- Separate Transmission and Axle Simplify Servicing
- Open Core Radiator is Standard
- Engine Efficiency/Performance Reduces Fuel Consumption
- Force Cooled Wet Disc Brakes

Smart Dash

- 5"Color LCD Display
- On-Board Diagnostics
- CANbus Communication
- Password Protected Engine Start Through Dash
- Powertrain Protection Monitoring System

High Performance Engine

FORD 2.5L LPG Tier-4

- Balanced Engine
- 4-Cylinder Dual Overhead Cam Design
- VVT (Variable Valve Timing)
- Sequential Multi-Port Fuel Injection
- Timing Chain-Driven Camshaft
- Automatic Belt Tensioners

SMART · STRONG · SAFE

Upright Table

S20/25/30C Standard

	Maximum Fork Height in	Maximum Fork Height mm	Overall Height[1] Lowered in	Overall Height[1] Lowered mm	Free Lift[3] in	Free Lift[3] mm	Standard Tilt Spec[2] B°/F°
	83	2120	60.0	1525	4.3	110	6/10
	117	2980	77.0	1955	4.3	110	8/10
•	130	3300	83.3	2115	4.3	110	10/8
	138	3500	88.8	2255	4.3	110	10/8
	147	3725	94.7	2405	4.3	110	10/8
	152	3860	97.6	2480	4.3	110	10/8
	164	4165	108.3	2750	4.3	110	5/6
	172	4380	116.1	2950	4.3	110	5/6
	182	4620	125.2	3180	4.3	110	5/6
	204	5170	135.6	3445	4.3	110	5/3

S32C Standard

	112	2845	77.0	1955	4.5	115	8/10
	125	3165	83.3	2115	4.5	115	10/8
•	132	3365	88.8	2255	4.5	115	10/8
	141	3590	94.7	2405	4.5	115	10/8
	147	3725	97.6	2480	4.5	115	10/8
	159	4030	108.3	2750	4.5	115	5/6

S20/25/30C Triple Stage[3]

	170	4320	77.0	1955	29.0	736	5/6
	177	4500	79.3	2015	31.3	796	5/6
•	189	4800	83.3	2115	35.3	896	5/6
	205	5210	88.8	2255	40.8	1036	5/3
	217	5520	94.7	2405	46.7	1186	5/3
	226	5740	97.6	2480	49.6	1261	5/3
	240	6100	103.9	2640	55.9	1421	5/3
	251	6370	108.3	2750	60.3	1531	3/3
	269	6830	116.1	2950	68.1	1731	3/3
	288	7315	125.2	3180	77.2	1961	3/3

S20/25C

•	163	4140	77.0	1955	29.0	736	5/6
	182	4620	83.3	2115	35.3	896	5/6
	198	5030	88.8	2255	40.8	1036	5/3
	210	5340	94.7	2405	46.7	1186	5/3
	219	5560	97.6	2480	49.6	1261	5/3
	244	6190	108.3	2750	60.3	1531	5/3

S20/25C

	115	2935	77.0	1955	29.0	736	5/6
	128	3255	83.3	2115	35.3	896	5/6
•	139	3530	88.8	2255	40.8	1036	5/6
	148	3760	94.7	2405	46.7	1186	5/6
	154	3910	97.6	2480	49.6	1261	5/6

ANSI/ITSDF and Insurance Classification
Standard truck meets all applicable mandatory requirements of Part III-ANSI/ITSDF B56.1 Safety Standard for Powered Industrial Trucks and Underwriters Laboratories requirements as to fire hazard only for D and LP classifications. For further information contact a CLARK representative.
Users should be aware of, and adhere to, applicable codes and regulations regarding operator training, use, operation and maintenance of powered industrial trucks, including:

- ANSI/ITSDF B56.1
- NFPA 505, fire safety standard for powered industrial trucks - type designations, areas of use, maintenance and operation.
- Occupational Safety and Health Administration (OSHA) regulations that may apply.

Contact your authorized CLARK forklift truck dealer for further information including operator training programs and auxiliary visual and audible warning systems, fire extinguishers, etc., as available for specific user applications and requirements.

Specifications, equipment, technical data, photos and illustrations are based on information at time of printing and are subject to change without notice. Some products may be shown with optional equipment.

Upright Table

S30C Hi-Lo

	Maximum Fork Height in	Maximum Fork Height mm	Overall Height[1] Lowered in	Overall Height[1] Lowered mm	Free Lift[3] in	Free Lift[3] mm	Standard Tilt Spec[2] B°/F°
	115	2935	77.0	1955	29.0	736	5/6
•	128	3255	83.3	2115	35.3	896	5/6
	139	3530	88.8	2255	40.8	1036	5/6
	148	3760	94.7	2405	46.7	1186	5/6
	154	3910	97.6	2480	49.6	1261	5/6

S20/25/30C Hi-Lo

	240	6100	83.0	2115	35.3	896	5/3
•	258	6560	89.0	2260	41.0	1041	3/3
	276	7015	95.0	2413	47.0	1194	3/3
	294	7480	101.0	2566	53.0	1347	3/3
	312	7935	107.0	2718	59.0	1499	3/3

Quad[3]

•	240	6100	83.0	2115	35.3	896	5/3
	258	6560	89.0	2260	41.0	1041	3/3
	276	7015	95.0	2413	47.0	1194	3/3
	294	7480	101.0	2566	53.0	1347	3/3
	312	7935	107.0	2718	59.0	1499	3/3

Grade Clearance

Model	A%	B%
S20	60.1	42.0
S25	50.0	42.0
S30	57.7	46.8
S35	57.7	48.6

- Indicates preferred common specification.

1 For overall height raised with load backrest, add 48 in. (1220 mm) to maximum fork height.
2 Standard tilt shown. Contact CLARK representative for information on optional tilt.
3 Freelift dimensions shown are without load backrest.
Other uprights available, contact a Clark representative.

Notes
Production engines and driveline components may vary in output and/or efficiency by ±5%. The performance shown represents nominal values which may be obtained under typical operating conditions of a machine.

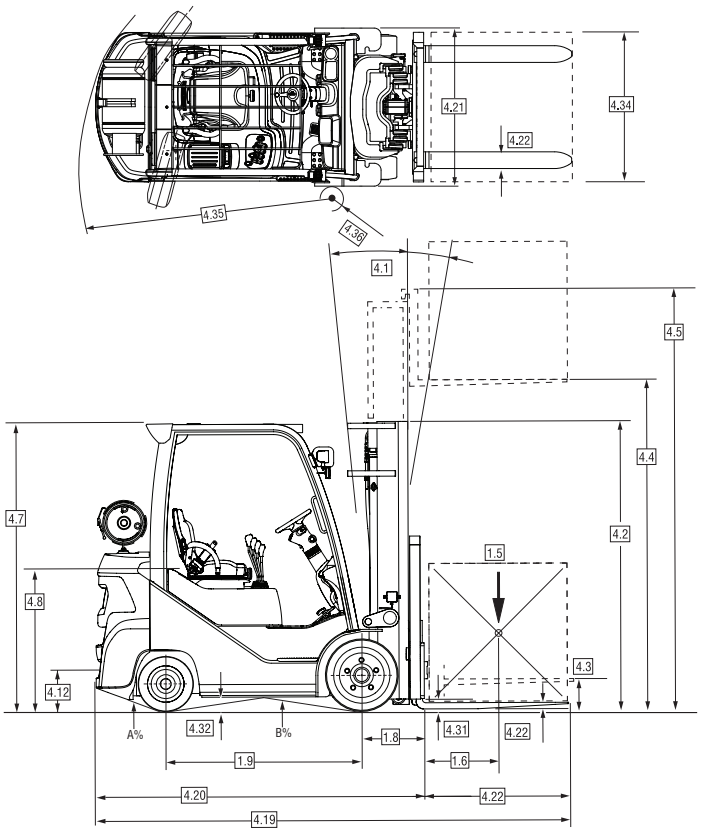

For corresponding data see Specification Chart

Standard Specifications S-Series Cushion L.P.Gas Engine

CLARK

S SERIES

				S-Series Cushion L.P.Gas Ford Tier4			
Specifications	1.1	Manufacturer					
	1.2	Manufacturer's designation		S20CL	S25CL	S30CL	S32CL
	1.3	Drive unit Diesel, L.P. Gas		L.P.Gas	L.P.Gas	L.P.Gas	L.P.Gas
	1.4	Operator type stand on / driver seated		Driver Seated	Driver Seated	Driver Seated	Driver Seated
	1.5	Load capacity / rated load	lbs(kg)	4000 (2000)	5000 (2500)	6000 (3000)	6500 (3200)
	1.6	Load center distance	in(mm)	24 (500)	24 (500)	24 (500)	24 (500)
	1.8	Load center distance, center of drive axle to fork face	in(mm)	16.1 (409)	16.1 (409)	16.1 (409)	16.3 (414)
	1.9	Wheelbase	in(mm)	56.3 (1430)	56.3 (1430)	56.3 (1430)	56.3 (1430)
Weight	2.1	Service weight	lbs(kg)	7562 (3430)	8380 (3801)	9301 (4219)	9764 (4429)
	2.2	Axle loading, loaded front / rear[6]	lbs(kg)	9,907 / 1,655 (4658 / 772)	11,383 / 1,997 (5370 / 932)	13,098 / 2,203 (6188 / 1031)	13,977 / 2,287 (6526 / 1102)
	2.3	Axle loading, unloaded front / rear	lbs(kg)	3,058 / 4,504 (1387 / 2043)	2,822 / 5,558 (1280 / 2521)	2,824 / 6,477 (1281 / 2938)	2,824 / 6,940 (1281 / 3148)
Tires	3.1	Tire type, P = pneumatic, SE = solid pneu[1]		C	C	C	C
	3.2	Tire size, front		21x7	21x7	21x8	21x9
	3.3	Tire size, rear		16x5-10.5	16x5-10.5	16x6-10.5	16x6-10.5
	3.5	Wheels, number front/rear (x = drive wheels)		2x / 2	2x / 2	2x / 2	2x / 2
	3.6	Tread, front	in(mm)	34.8 (884)	34.8 (884)	35.7 (909)	36.5 (926)
	3.7	Tread, rear	in(mm)	35.2 (895)	35.2 (895)	36.2 (920)	36.2 (920)
Dimensions	4.1	Tilt of upright/fork carriage, back / forward	deg.	10B / 8F	10B / 8F	10B / 8F	10B / 8F
	4.2	Height, upright lowered	in(mm)	83.3 (2115)	83.3 (2115)	83.3 (2115)	83.3 (2115)
	4.3	Freelift	in(mm)	4.3 (110)	4.3 (110)	4.3 (110)	4.5 (115)
	4.4	Lift height[1]	in(mm)	130 (3300)	130 (3300)	130 (3300)	125 (3165)
	4.5	Height, upright extended[5]	in(mm)	151.7 (3854)	151.7 (3854)	153.7 (3903)	150.6 (3824)
	4.7	Height overhead guard	in(mm)	82.9 (2105)	82.9 (2105)	82.9 (2105)	82.9 (2105)
	4.8	Seat height	in(mm)	43.8 (1113)	43.8 (1113)	43.8 (1113)	43.8 (1113)
	4.12	Coupling height	in(mm)	12.2 (310)	12.2 (310)	12.2 (310)	12.2 (310)
	4.19	Overall length	in(mm)	132.4 (3364)	134.4 (3414)	136.5 (3468)	137.8 (3501)
	4.20	Length to face of forks	in(mm)	90.3 (2294)	92.3 (2344)	94.4 (2398)	95.7 (2431)
	4.21	Width_Tires	in(mm)	41.7 (1060)	41.7 (1060)	43.9 (1114)	45.5 (1155)
	4.22	Fork dimensions	in(mm)	1.75x4x42 (45x100x1070)	1.75x4x42 (45x100x1070)	1.75x4.8x42 (45x122x1070)	2.0x5x42 (50x125x1070)
	4.23	Fork carriage, ITA		CLASS II	CLASS II	CLASS III	CLASS III
	4.24	Fork carriage width	in(mm)	37 (940)	37 (940)	41 (1041)	41 (1041)
	4.31	Ground clearance minimum, loaded	in(mm)	3.3 (85)	3.3 (85)	3.3 (85)	3.3 (85)
	4.32	Ground clearance center of wheelbase	in(mm)	4.3 (110)	4.3 (110)	4.3 (110)	4.3 (110)
	4.34	Right Angle Stack (Add Load Length and Clearance)	in(mm)	95.6 (2429)	97.2 (2470)	99.1 (2518)	100.8 (2561)
	4.35	Turning radius (truck)	in(mm)	79.5 (2020)	81.1 (2061)	83.0 (2109)	84.5 (2147)
	4.36	Inside turning radius	in(mm)	21.5 (545)	21.5 (545)	21.5 (545)	21.5 (545)
Performance	5.1	Travel speed loaded / unloaded	mph(km/h)	11.2 (18.1) / 11.5 (18.5)	11.2 (18.1) / 11.5 (18.5)	11.1 (17.9) / 11.4 (18.4)	11.2 (18.0) / 11.5 (18.6)
	5.2	Lift speed loaded / unloaded	fpm(m/s)	102.4 (0.52) / 106.3 (0.54)	102.4 (0.52) / 106.3 (0.54)	102.4 (0.52) / 106.3 (0.54)	84.6 (0.43) / 88.6 (0.45)
	5.3	Lowering speed loaded / unloaded	fpm(m/s)	108.2 (0.55) / 98.4 (0.50)	108.2 (0.55) / 98.4 (0.50)	108.2 (0.55) / 98.4 (0.50)	92.5 (0.47) / 84.6 (0.43)
	5.6	Max. drawbar pull loaded / unloaded[2,3]	lbf(N)	4643 (20,653) / 1867 (8,306)	4628 (20,584) / 1724 (7,669)	4603 (20,475) / 1609 (7,157)	4555 (20,261) / 1579 (7,024)
	5.8	Max. gradeability loaded / unloaded[2,3]	%	39.8 / 22.1	33.8 / 18.8	29.0 / 16.1	27.3 / 14.8
	5.10	Service brake		WET	WET	WET	WET
Drive Line	7.1	Manufacturer / Type		FORD / FORD2.5	FORD / FORD2.5	FORD / FORD2.5	FORD / FORD2.5
	7.2	Rated output acc. to SAE J 1349	HP(kW)	69.7 (52)	69.7 (52)	69.7 (52)	69.7 (52)
	7.3	Rated speed	rpm	2500	2500	2500	2500
	7.4	No. of cylinders / displacement	/in³(cm³)	4 / 152 (2488)	4 / 152 (2488)	4 / 152 (2488)	4 / 152 (2488)
	8.2	Operating pressure for attachments	bar	Adjustable	Adjustable	Adjustable	Adjustable
	8.4	Sound level, driver's ear[4]	dB (A)	79	79	79	79

1. Futher lift heights see upright table
2. Loaded with 1.6 km/h
3. At friction coefficient μ=0.6
4. Equivalent permanent sound-pressure level L pAeq, T in accordance with DIN EN 12053
5. Without load backrest
6. Pounds calculated at 24" LC and Kilograms calculated at 500mm LC

S SERIES™

& Don't Forget…Safety Starts With You!

Before operating a lift truck, an operator must:
- Be trained and authorized
- Read and understand operator's manual
- Not operate a faulty lift truck
- Not repair a lift truck unless trained and authorized
- Have the overhead guard and load backrest extension in place
- Perform daily inspections

During operation, a lift truck operator must:
- Wear a seat belt
- Keep entire body inside truck cab
- Never carry passengers or lift people
- Keep truck away from people and obstructions
- Travel with lift mechanism as low as possible and tilted back
- Allow safe stopping distance and come to a complete stop before leaving operator compartment

To park a lift truck, an operator must:
- Completely lower forks or attachments
- Shift into neutral
- Turn key off

100 YEARS OF MATERIAL HANDLING INNOVATION

A Centennial is an important milestone which not only celebrates longevity, but testifies to the strength of the CLARK brand across generations. This is reflected in the more than one million lift trucks manufactured by CLARK Material Handling Company over the past 100 years. Even more powerful than the number of trucks built is the company's legacy of innovation. It began in 1917 when employees of CLARK Equipment Company constructed a simple three-wheeled shop buggy to haul sand and castings between buildings at their Buchanan, Michigan plant. The "Tructractor" as the shop buggy was named, became the first internal combustion material handling truck and was a great success. The industrial truck was born and in the process CLARK developed the first hydraulic lift. Through the years, many extraordinary inventions followed, among them the nested I-beam upright, overhead guard and operator restraint system. The founding principles of Eugene B. Clark are still true: "Aim always to build the best; never be content with just as good." Today the company remains focused on a bright future and the technologies and trends driving the material handling industry around the world. One Purpose, One Brand, One Legacy, One Century.

ONE PURPOSE ONE BRAND ONE LEGACY ONE CENTURY

CLARK MATERIAL HANDLING COMPANY
North American Headquarters
700 Enterprise Drive • Lexington, KY 40510
866-252-5275 • **www.clarkmhc.com**

S-SERIES S25C BROCHURE
59-894-0350 Printed in USA OTP01185M

© 2018 CLARK Material Handling Company